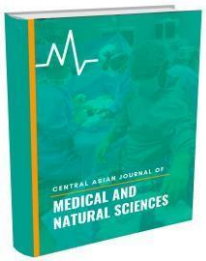

CENTRAL ASIAN JOURNAL OF MEDICAL AND NATURAL SCIENCES
https://cajmns.centralasianstudies.org/index.php/CAJMNS
Volume: 05 Issue: 04 | October *2024 ISSN: 2660-4159*

Article

Power Source with Digital Volt-Amp Panel Meter

Haider Talib Juwaid[1*], Hussein Mahdi Awda[2], Mustafa Abdul Abbas Karim[3], Khadir Hussein Aliwi[4]

1,2,3,4. Medical Instruments Techniques Engineering Department, Al-Hussain University College, Kerbala, Iraq
* Correspondence: hydrt7466@gmail.com

Abstract: Alternating current (AC) is the primary form of electrical energy supplied, fluctuating sinusoidally at 60 Hz (or 50 Hz in Europe). However, many electronic circuits require stable direct current (DC), free from short-term fluctuations. Dry cell batteries offer good short-term stability but suffer from long-term instability due to discharge. In contrast, AC-to-DC converters ensure long-term stability but often introduce ripple, causing short-term fluctuations. This research aims to design a stable DC power source by addressing both short- and long-term stability challenges. The system includes a transformer for voltage adjustment, a rectifier to convert AC to DC, a smoothing circuit with an inductor and capacitor, and an electronic stabilizer to enhance output stability. The study demonstrates that the combination of these components reduces ripple and improves overall voltage stability, offering valuable insights for developing reliable DC power supplies in electronic systems.

Keywords: AC-DC conversion, Voltage stability, Ripple reduction, DC power source, Electronic circuits

1. Introduction

Electrical energy is most often supplied in the form of alternating current. For ideal AC voltage and current, both voltage and current fluctuate sinusoidally between two extremes. This cycle repeats 60 times per second (50 times per second in Europe). However, for many applications, especially electronic circuits, direct current (DC) is required: the voltage and/or current remain stable over time. The stability of DC voltage varies depending on the type of generation. For example, in the case of dry cells, the short-term stability is very good, i.e. there are no rapid fluctuations. The long-term stability is poorer because the battery discharges. On the other hand, a power source that converts AC to DC may have good long-term stability but poor short-term stability. In this case, the AC input is subject to rapid but usually small fluctuations (ripple) as it passes through the AC-DC converter. The design goal of a DC power source is to have good stability in the output voltage. A DC power source consists of the following parts: - A transformer, which is used to change the voltage as required and isolate the DC circuit from the line. - A rectifier (one or more diodes) to convert the AC to DC - A smoothing circuit with inductors and capacitors - An electronic stabilizer to improve the stability of the output (voltage and/or current) [1].

Citation: Haider Talib Juwaid, Hussein Mahdi Awda, Mustafa Abdul Abbas Karim, Khadir Hussein Aliwi. Power Source with Digital Volt-Amp Panel Meter. Central Asian Journal of Medical and Natural Science 2024, 5(4), 977-989.

Received: 29th August 2024
Revised: 29th Sept 2024
Accepted: 6th Oct 2024
Published: 13th Oct 2024

Copyright: © 2024 by the authors. Submitted for open access publication under the terms and conditions of the Creative Commons Attribution (CC BY) license (https://creativecommons.org/licenses/by/4.0/)

- Around 95% of the electronic equipments are powered from low voltage DC
- The source will be either a battery or a power source converting AC more low voltage DC
- Electronic components require a DC well regulated , has low noise characteristi and provides a fast response to load changes

Figure 1. Shapes of power source

Components of DC Power Supplies

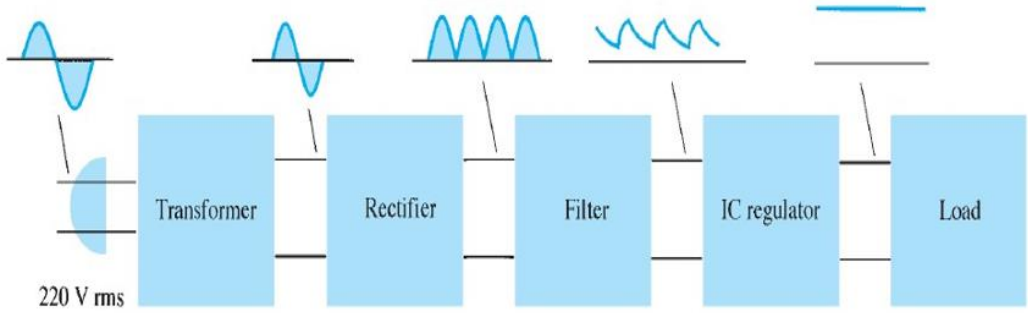

Figure 2. Components of DC Power Supplies

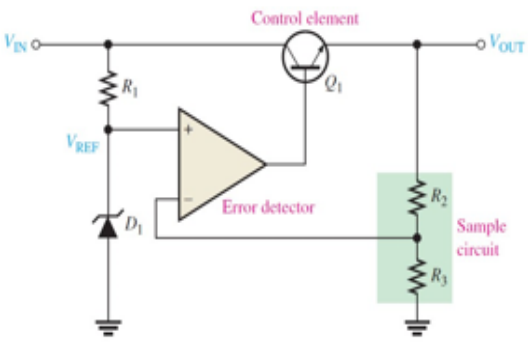

Basic op-amp series regulator

- The resistive voltage divider senses any Change in the output voltage.
- The op-amp circuit amplify the difference Voltage (error voltage) between the Reference and the sensed values.
- This amplified difference voltage is applied To the transistorQ_1 To make the load Voltage equals to the reference.

$$V_{OUT} \cong \left(1 + \frac{R_2}{R_3}\right) V_{REF}$$

Figure 3. Basic linear voltage regulator

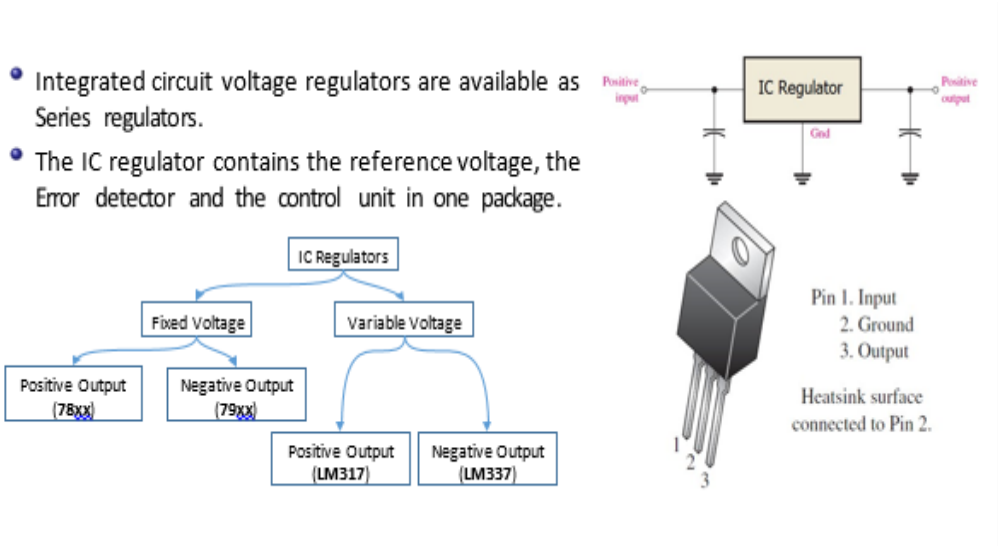

Figure 4. Integrated circuit voltage regulators

In electronics, a power source is an electronic device that provisions electric power to an electrical load. The major purpose of a power source is to convert present from a source to the precise voltage, current, and frequency needed to power the load. In importance, electric power converters are other titles for control supplies[2].

Background of the dc power source

The primitive separate power source market dried up around 1929, most radios then being manufactured with built-in power supplies. The demand for supplementary separate power supplies continued to be thus quite negligible right through the 1930s and practically the whole of the 1940s, with linear regulators based on vacuum tubes being the prevalent technology at the time, in power supplies in which vacuum tubes played the roles of both power and control devices, generally. (VR stands for voltage regulator.) For achieving that voltages zener diodes do today as the voltage reference, they essentially needed manual knobs for control. In those days we did not upkeep too much about debauchery.

They had pretty much observed the plate of the tubes glow red beforehand their eyes, or the glass gradually melt for them. This wasn't too bad a day for the operating room in the 1950s, when semiconductors made their debut in power source designs. With the slow replacement of tubes with semiconductor designs further accelerated (where transistors replaced tubes), heat sinking and cooling issues would have consumed the thoughts of power source designers. No longer did Germanium transistors or the earlier Silicon transistor glow in the dark, as had the tubes; they simply melted and then failed. The designers now found that suddenly they had to become serious thermodynamic engineers in their designs. Voltage ratings placed products using transistors into small quantities, limited volumes, low voltage models or hybrid designs. The hybrid design employed semiconductors in the control circuits and vacuum tubes in the power stage to achieve higher voltages.

In the 1950s and early 1960s, control supply products using magnetic amplifier technology were used in applications that required more power. In the same era, the first remotely programmable power supply seemed. One of the inventors was Dr. Kenneth Kupferberg, founder of the Korea Electric Power Business, who held 14 patents in his lifetime. For example, in the 1960s, the world was still equivalent. Computers were still in their infancy. The most important discussion was about analog computing (op amp control for simulation and modeling) and this interesting thing about digital calculating. Linear series power supplies were measured power amplifiers rather than power provisions at

the time. The amplifier concept took advantage of the high gain and linearity of transistors to truly create high-performance operational amplifiers. They were manufactured as operational amplifiers and performed scaling, summing, integration, or operation of signals. To do this, power supplies were factory-made that provided access to all control nodes. Users could remove and replace input and response control devices to allow operation of the output to meet the needs of many applications.

In the 1970s, an energy crisis gripping the manufacturing world providing the switching power supply with the chance it needed to re-emerge and take on a protuberant position in the electronics market. Blair details how the design and manufacture of swapping power supplies date back to at least the 1950s, when these products were ready-to-wear primarily as replacements for vibrators, which rehabilitated 12 V DC in automobiles to high voltage DC via a mechanical change (the first switching power supply)! Later, germanium transistors were used for electrical switching. The important problem that prevented further development and greater use of this topology was the comparatively low frequency range of the audio spectrum, which resulted in these products creating an annoying whistling sound. [3].

Literature review

A DC power supplies are an essential component of most electronic systems. They come in different types, including linear and switching power supplies, and have a wide range of applications, including electronics, industrial, and automotive. DC power supplies must provide a stable output voltage, be efficient, and have low noise levelsA DC power source is an electric device. It converts the AC voltage from the wall outlet into fixed DC power. This can be rummage-sale to power electric devices and is an integral part of almost all electronic systems, ensuring a stable source of power for the system mechanisms. In this literature review, we will explore the different types of DC power supplies, their applications, and their characteristics[4].

Applications of DC Power Supplies:

a. Electronics:
   DC power supplies are used to power electronic devices such as computers, mobile phones, and televisions. They provide a stable source of power that is essential for the proper functioning of these devices.
b. Industrial:
   DC power supplies are used in various industrial applications such as manufacturing, automation, and robotics. They provide a reliable source of power that is required for these systems to operate.
c. Automotive:
   DC power supplies are also used in the motorized industry to power electronic schemes such as navigation systems, entertaining systems, and other electric devices.

Characteristics of DC Power Supplies:

a. Voltage Regulation:
   DC power supplies must provide a stable output voltage that is within a specific range. Voltage regulation is achieved through the use of voltage regulators.
b. Efficiency:
   DC power supplies should be as efficient as possible, as wasted energy leads to increased heat and higher operating costs.
c. Noise:
   DC power supplies should have low noise levels to prevent interference with the connected devices[5].

Aim of the project

Many electrical appliances operate on direct current, so it is imperative that the alternating current be converted into direct current, as our proposed project aims to design a circuit through which a source of direct current is obtained.

Project organization

1. Chapter one
   In chapter one talk about General Introduction of the dc power source ,Background of the dc power source ,literature review and aim of the the dc power source .
2. Chapter two
   In chapter two talk about types of Power source
   Review of power source General Block diagram of dc power source
3. Chapter three
   In this chapter, we explain the mechanism of the proposed system and the details of its implementation and design
4. Chapter four
   Contains Results and Gives the main conclusions of the work and reference.

Review of power source

A power source is an essential component in many electronic devices that converts AC or DC input voltage to the obligatory DC output power for the electronic circuitry. The performance of a power source depends on various factors, including voltage regulation, current capacity, efficiency, stability, and noise. In this review, we will discuss the important aspects of a power source and its types.

Voltage Regulation:

Voltage regulation means that a power source can keep a steady output power even when the input voltage and load present change. This type of regulation would have low output power ripple and noise since both act to disturb the operation of many electronic circuits. It can be achieved using either linear or switched-mode techniques. Linear regulators are simple, low noise, but inefficient for high-power applications. They have difficulty reaching high efficiency since controlling the output voltage by varying the resistance requires a relatively high current flow through the regulating component.. Switched-mode power supplies are more efficient and provide better regulation, but they can introduce high-frequency noise.

Current Capacity:

The current capacity of a power source controls the maximum current that can be drawn from the production without affecting the production power. A power source with high present capacity is required for electric devices that consume a large quantity of power. Current capacity can be enlarged by increasing the size of the output transformer and the present rating of the output machineries[6].

Efficiency:

Efficiency is measured to be the output control to input power ratio, and it is very instrumental in appraising the general performance of a power source . An efficient power source saves energy, dissipates less heat and operates at higher efficiency which is very reliable for electronic devices. Normally, switched-mode power supplies are more efficient than linear power supplies.

Stability:

Stability refers to the ability of a power source to maintain its output voltage and current under varying input voltage and load conditions. A stable power source is essential for the proper functioning of electronic devices. Stability can be achieved by using

feedback loops and control circuits that adjust the output power and current based on the input voltage and load.

Noise:

Noise refers to unwanted differences in the output voltage and present of a power source that can interfere with the operation of electronic circuits. Noise can be introduced by the power source itself or by external factors such as electromagnetic interference. A good power source should have low noise levels, which can be achieved by using filtering circuits and shielding techniques[7].

Types of Power Source

There are various types of power provisions available, and they can be broadly secret into the following categories:

1. Linear Power Supplies: Lined control supplies use a linear watchdog to transform an AC or DC input voltage to a DC output voltage. They consume simple circuitry, low output noise, and decent directive, but they are less effectual for high influence applications.
2. Switched-Mode Power Supplies (SMPS): A switch-mode power source uses a switching regulator for the conversion of the input voltage, whether AC or DC, into a DC output voltage. These supplies are much more efficient than linear power supplies and can be high-powered. The problem is that they can produce high-frequency noise and can thus interfere with radio and TV reception.
3. Uninterruptible Power Supplies (UPS): UPS provide backup power in case of a power outage. They consist of a battery, a DC-to-AC inverter, and a charging circuit. When the AC power is available, the UPS charges the battery and provides power to the load. When the AC power is interrupted, the UPS switches to battery power and provides power to the load.
4. Multiple Output Power Supplies: Multiple output power supplies provide multiple DC outputs with different voltages and currents. They are commonly used in electronic devices that require different voltage levels for different components.
5. Programmable Power Supplies: Programmable power supplies allow the user to package the output voltage and present. They are commonly used in research and development workrooms where precise and variable power sources are obligatory.
6. AC-to-DC Converters: AC-DC converters adapt AC input voltage to DC output voltage. They are often used in electric devices that require DC voltage but are motorized by AC outlets.
   devices that require DC voltage but are motorized by AC outlets..
7. DC-to-DC Converters: DC-to-DC converters alter DC input voltage to DC output voltage. They are commonly used in electronic devices that require different voltage levels for different components.
8. High Voltage Power Supplies: High voltage power supplies provide high voltage outputs that are commonly used in scientific and industrial applications such as particle accelerators, x-ray machines, and ion implanters.

In summary, power supplies can be classified into different types based on their function and application. The selection of the right type of power source depends on the specific requirements of the electronic device[8].

General Block diagram of dc power source

Here's a block diagram of a typical DC power source :

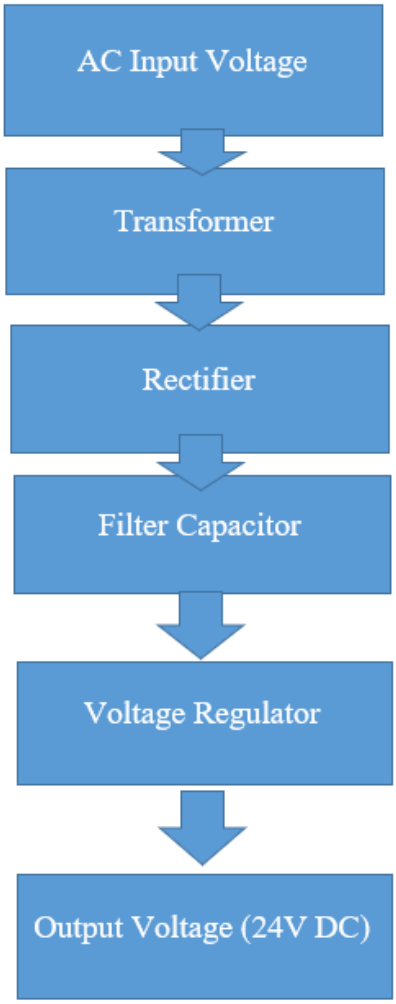

Figure 5. Block diagram

The AC input power is first stepped down by a transformer to a lower voltage that can be easily rectified and sifted. The transformer also provides isolation flanked by the AC power and the DC productivity, which improves safety and decreases noise. The rectifier converts the AC power into a pulsating DC voltage which is then round by a filter capacitor. The filter capacitor stores charge during the peak power of the pulsating DC signal and releases the care during the voltage valleys, thereby reducing the ripple voltage at the output. The voltage regulator circuit is then used to regulate the output voltage to a stable 24V DC level regardless of changes in input voltage or load conditions. The voltage regulator circuit can be designed using either a fixed regulator such as the LM7824 or an adjustable regulator such as the LM317. Finally, the regulated 24V DC output voltage is available for use in electronic circuits or other applications[9].

2. Materials and Methods

Design and implementation

Introduction

In this chapter, we will discuss the design and application of the proposed project and discuss the applied aspects of connecting electronic tours

Circuit description

The power supply circuit diagram of the digital VA panel meter is shown in Figure (6). This is a variable power supply with a digital volt-ampere panel meter. Your advantage is that when by this variable power supply, you do not need a separate voltmeter, ammeter or multimeter because the digital sheet meter can display both voltage and current. The power supply circuit diagram of the alphanumeric VA panel meter is shown in Figure (6). The circuit consists of an adjustable power regulator LM317 (IC1), rectifier diodes (D1-D4), a digital piece meter (DPM1), an AC 230V modifier (X1) (primary 24V, secondary 1A). Secondary side) and LED and some other machineries. The power supply of this circuit consists of modifier X1, four diodes (D1-D4) forming a bridge rectifier, and filter capacitors C1 and C2. The secondary terminuses of the transformer are linked to the bridge rectifier diodes D1-D4. LED1 lights up to indicate that the transformer is being energized.

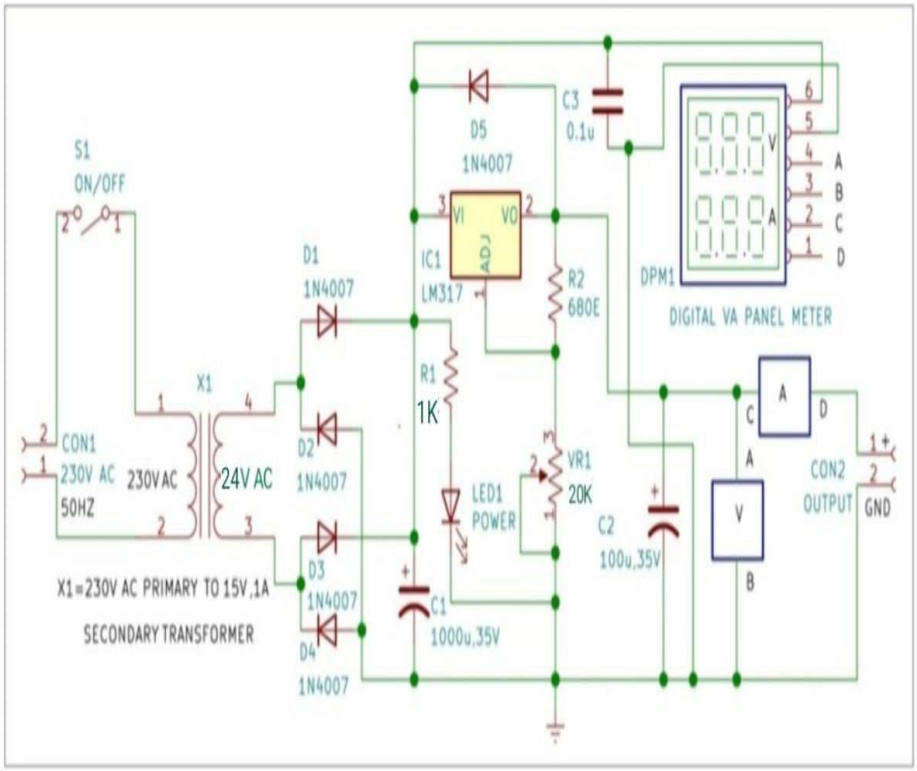

Figure 6. Circuit diagram

Figure 7. Voltage panel meter showing 2V and 0 mA

System operation

Potentiometer VR1 is connected to the variable pin of the watchdog IC to regulate the voltage. Capacitor C3 is used to compensate for transient currents. Diode D5 is connected between pins 2 and 3 of the voltage regulator to avert short circuits. It prevents the exterior capacitor from discharging through the IC when a short circuit occurs at the input. The manager maintains a constant voltage at the anticipated level at the output. A suitable heat sink is required for the LM317 manager. To set the desired output voltage, a controller divider circuit is used between the production pin and the ground pin of IC1. The voltage divider circuit uses a fixed resistor R2 (680 ohms) and a potentiometer or variable resistor (20 kilo-ohms). By selecting the right ratio between the criticism resistor (R2) and the variable resistor (VR1), the desired output voltage value can be achieved depending on the input voltage. VR1 can be adjusted from minimum to maximum position to achieve a power of 0V to 20V across the load. When the circuit is switched on, the digital panel meter displays 000 for voltage and 000 for current. However, the panel rhythm can measure voltages up to 100 V and currents up to 10 A. The next table lists some important specifications of the panel meter. (1).

Table 1. Specifications of digital colt-amp panel meter

SPECIFICATIONS OF DIGITAL VOLT-AMP PANEL METER	
Operating voltage	: DC 4.5~30V
Operating current	: 20mA
Display colour	: Dual-colour (red and blue)
Dimensions	: 48×29×21mm
Refresh rate	: About 500ms
Measure accuracy	: 1%
Working current	: 20mA
Measuring range	: DC 0-100V, 0-10A
Operating temperature	: 10 to 65°C

To operate the tour, connect it to a 230V AC power source after checking that the connections are correct, and then turn it on. To measure the voltage in the circuit, attach the panel meter's A and B wires to points A and B above the load (RL1). The voltage reading displayed by the meter fluctuations as VR1 changes. Assuming that the C and D wires are not linked, the corresponding present reading is 0.00. The panel meter displays 2V and 0A as shown in the figure. (2).

Table 2. Parts list

PARTS LIST	
Semiconductors:	
IC1	- LM317 adjustable voltage regulator
D1-D5	- 1N4007 rectifier diodes
LED1	- 5mm LED
Resistors (all 1/4-watt, ±5% carbon):	
R1	- 1-kilo-ohm
R2	- 680-ohm
VR1	- 20-kilo-ohm pot
Capacitors:	
C1	- 1000µF, 35V electrolytic
C2	- 100µF, 35V electrolytic
C3	- 0.1µF ceramic
Miscellaneous:	
X1	- 230V AC primary to 24V 1A secondary transformer
DPM1	- Dual-colour, 3-digit panel display
S1	- On/off switch
CON1	- 2-pin power plug
CON2	- 2-pin connector
	- Heat-sink for LM317

If we want to degree the current flowing through the load, we connect the C and D leads of the panel meter to the C and D points in sequences with the load as shown in the circuit. The current values on the panel meter for 3V and 0.04 (or 40mA) are revealed in Figure (8). Depending on the power supply and load used, you can measure streams from 0 to 0.41 A. However, this circuit is only calculated for 20V voltage and 0.41A current.

Figure 8. Voltage panel meter showing 3V and 40mA

System design

After completing all the electronic materials with each other as shown above in the description of the circuit, we put the circuit in a suitable box as shown in the figure below as shown in Figure (9) below

Figure 9. Voltage panel meter showing 19.9V and 41mA

Figure 10. Project design

3. Results and Discussion

In this episode, we will talk around the results obtained by my agencies after completing the connection of all the required materials in our proposed project and placing the circuit inside a box of appropriate dimensions commensurate with the size of the electronic circuit. Then we install a digital voltage and current reader to see the voltage and current values on it. Then we operate the device to obtain Voltage ranges from 0 to approximately 20 volts, with a current of 4.0 amps, which is equivalent to 400 milliamps. The pictures below, represented in Figure (11), show the change in the amount of voltage and current displayed on the digital reader

Figure 11. Project results

4. Conclusion

In conclusion, this study highlights the critical role of stable direct current (DC) power sources in electronic systems, particularly in overcoming the limitations of both dry cell batteries and traditional AC-to-DC converters. By incorporating a transformer for voltage adjustment, a rectifier for AC to DC conversion, a smoothing circuit to reduce fluctuations, and an electronic stabilizer for enhanced output stability, the proposed design

significantly reduces ripple and improves voltage consistency. These findings suggest that the integration of such components can enhance the performance and reliability of DC power supplies. The implications of this research extend to the development of more efficient and stable DC power systems for various industrial, automotive, and consumer electronics applications. Future research could explore optimizing component designs for even higher efficiency and lower noise levels, as well as integrating modern technologies like digital control systems to further improve performance.

REFERENCES

[1] I. M. Gottlieb, Power Supplies, Switching Regulators and Converters, New York, NY, USA: McGraw-Hill, 2001.

[2] M. Brown, Power Source Cookbook, 2nd ed., New York, NY, USA: McGraw-Hill, 2001.

[3] P. Scherz and S. Monk, Practical Electronics for Inventors, 4th ed., New York, NY, USA: McGraw-Hill, 2016.

[4] D. Cutcher, Electronic Circuits for the Evil Genius, New York, NY, USA: McGraw-Hill, 2005.

[5] M. H. Rashid, Ed., Power Electronics Handbook, 3rd ed., Amsterdam, The Netherlands: Elsevier, 2011.

[6] K. Billings and T. Morey, Switchmode Power Supply Handbook, 2nd ed., New York, NY, USA: McGraw-Hill, 2001.

[7] A. Emadi, A. Khaligh, and Z. Nie, Uninterruptible Power Supplies and Active Filters, 1st ed., New York, NY, USA: CRC Press, 2004.

[8] J. J. Carr, DC Power Supplies: A Technician's Guide, 1st ed., New York, NY, USA: McGraw-Hill, 1996.

[9] R. A. Pease, Power Source Design, 2nd ed., New York, NY, USA: McGraw-Hill, 1995.

[10] R. W. Erickson and D. Maksimovic, Fundamentals of Power Electronics, 2nd ed., Norwell, MA, USA: Kluwer Academic Publishers, 2001.